PRM 260

BASIC INSTALLATION DATA

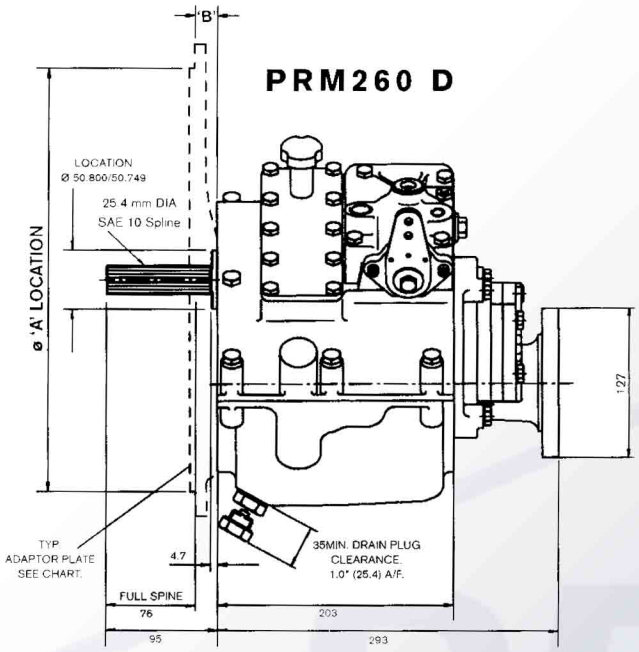

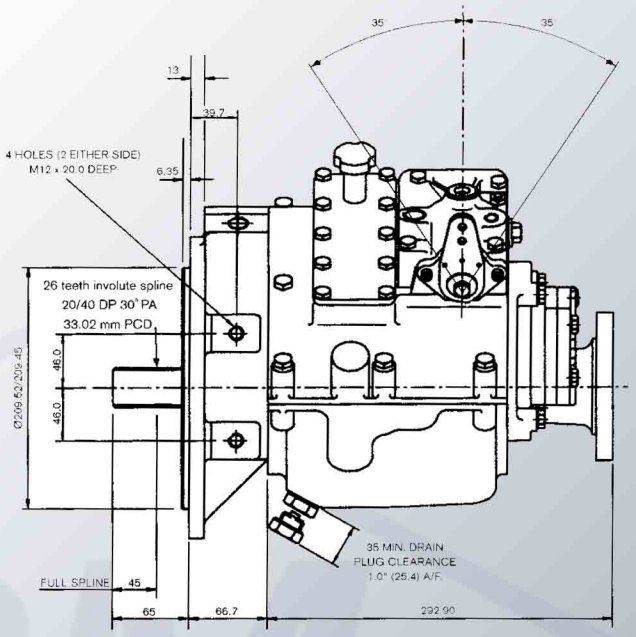

PRM260 C

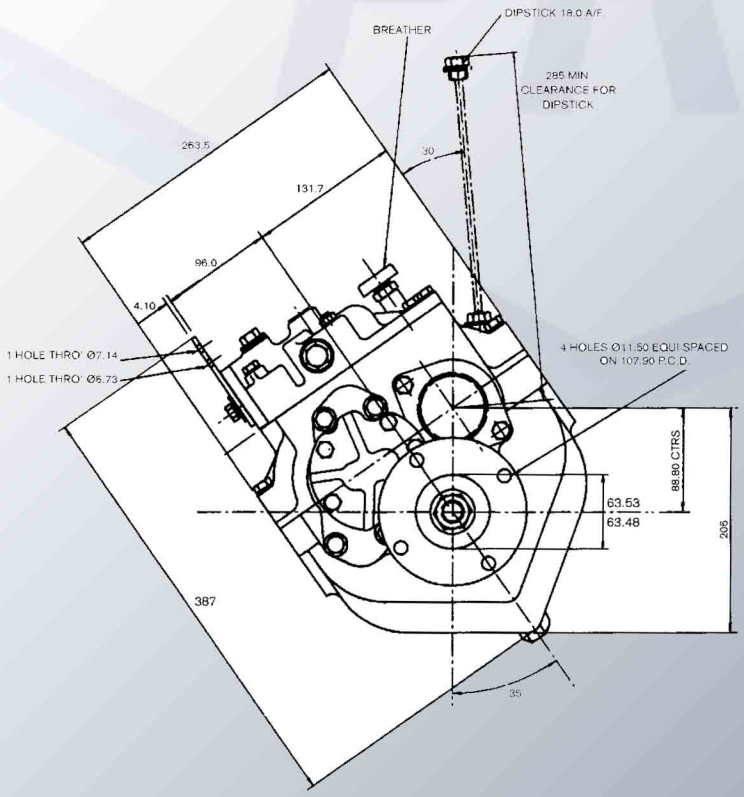

IMPORTANT NOTE

All information given in this leaflet is correct at the time of going to press. However, in the interests of technical progress, design specifications are subject to change without notice. Accordingly data given herein should be regarded as a general guide only and does not form part of any contract. Any specific performance requiremnets must be made known to us in writing with customer order of goods. Illustrations are approxamite only and do not form part of any contract with us, certified installation drawings are available on request. All goods are supplied in accordance with our standard terms and conditions of sale.

ADAPTORS	Ø 'A'	'B'
	mm	mm
SAE2	447.67	16.0
SAE3	409.58	15.75
SAE4	361.95	19.05
SAE5	314.33	15.88
B/W	209.55	28.58

INSTALLATION ANGLE

The maximum fore and aft installation angle permissible at rest in 15°

A.S.A.P. SUPPLIES LTD

Reed House, Ellough Industrial Estate, Beccles, Suffolk NR34 7TD
Tel: 0845 1300 870 or 01502 716 993 Fax: 0800 316 2727 or 01502 711 680
www.asap-supplies.com sales@asap-supplies.com