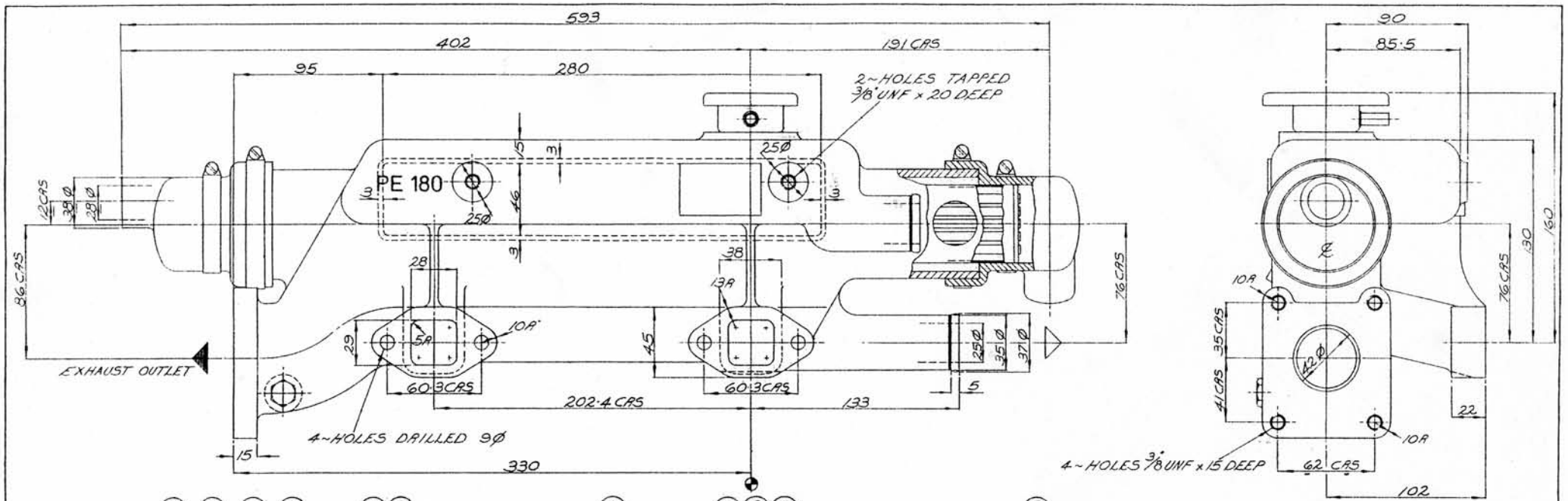

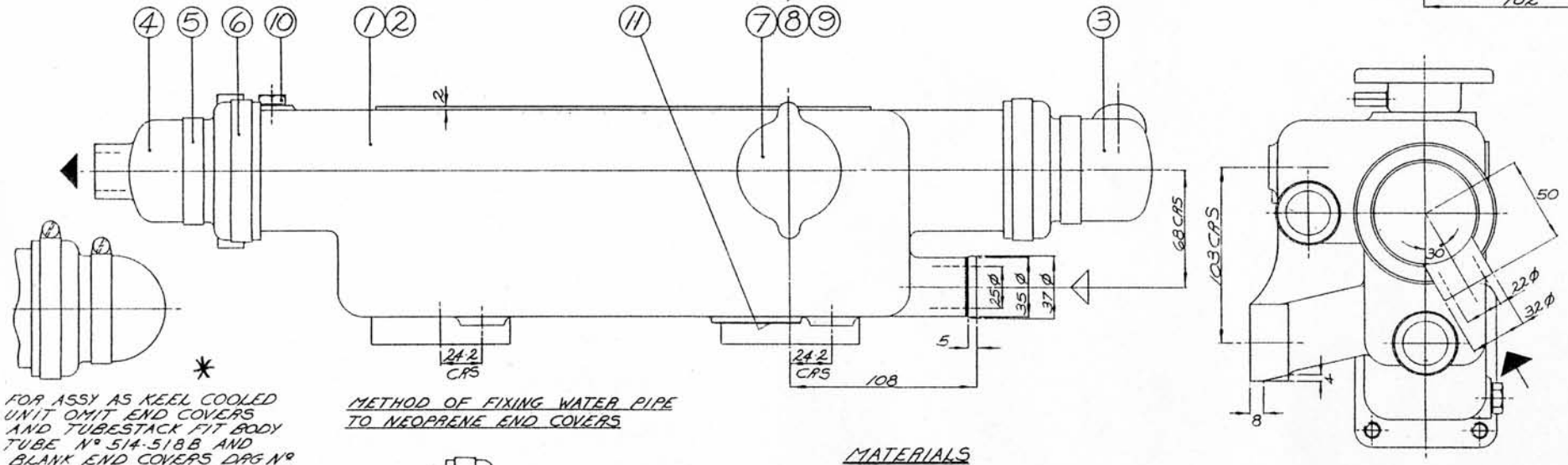

* FOR ASSY AS KEEL COOLED UNIT OMIT END COVERS AND TUBESTACK FIT BODY TUBE Nº 514-518B AND BLANK END COVERS DRG Nº 3419 MARK UP NAMEPLATE AS 3483 KC

				12	
	3594	1	NAMEPLATE	11	BRASS
1/4 BSP	915	1	DRAIN PLUG	10	BRASS
	3469	1	FILLER INSERT	9	BRASS
	2755	1	FILLER NECK	8	
	2753	1	FILLER CAP	7	
	Nº312	2	HOSE CLIP	6	SS
	Nº237	2	HOSE CLIP	5	SS
	3667	1	END COVER	4	N-PRENE
	2679	1	END COVER	3	N-PRENE
514-525TN1		1	TUBESTACK	2	CN10
DR12	2771	1	MANIFOLD BODY	1	LM6M
PART No.	DRG. No.	No. OFF	DESCRIPTION	ITEM No.	MATERIAL

METHOD OF FIXING WATER PIPE TO NEOPRENE END COVERS

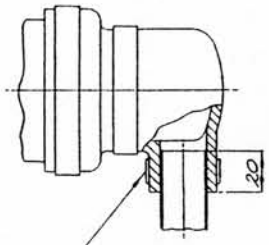

HOSE CLIP TO BS 3628 SIZE Nº 162 (NOT SUPPLIED)

MATERIALS

BODY ~ ALUMINIUM LM6M

TUBESTACK ~ CUPRO NICKEL 90/10

END COVERS ~ NEOPRENE

▷ DIRECTION OF ENGINE FRESH WATER FLOW

▶ DIRECTION OF SEA WATER FLOW

ASAP 201231/20131KC

ALL DIMENSIONS ARE IN MILLIMETRES

E J BOWMAN (BIRMINGHAM) LIMITED
ASTON BROOK STREET EAST
BIRMINGHAM, B6 4AP

DRAWN	S. J. Bowley	MANIFOLD HEAT EXCHANGER PE180
TRACED		
CHECKED		
DATE	30-11-82	
SCALE	FULL SIZE	DRAWING NUMBER 3483