ASAP 201237

ISS No	MODIFICATION	DATE	SIGN

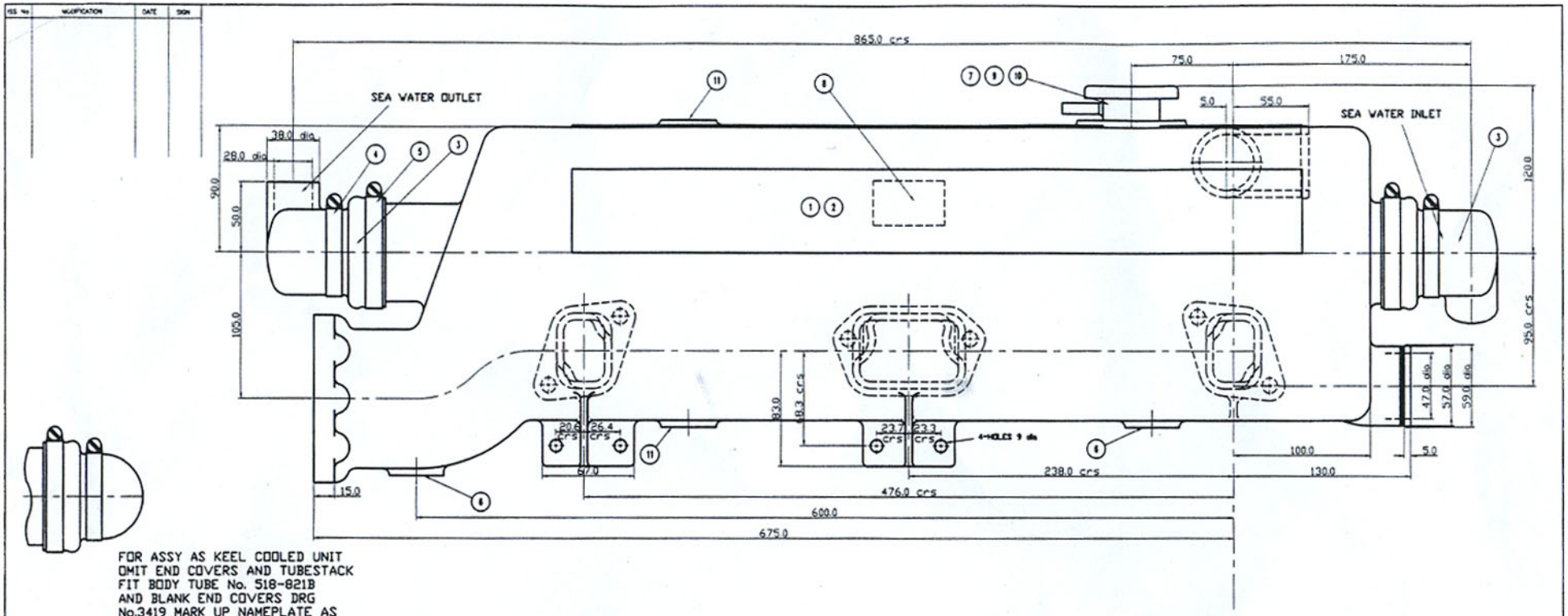

FOR ASSY AS KEEL COOLED UNIT
OMIT END COVERS AND TUBESTACK
FIT BODY TUBE No. 518-821B
AND BLANK END COVERS DRG
No.3419 MARK UP NAMEPLATE AS
4240KC

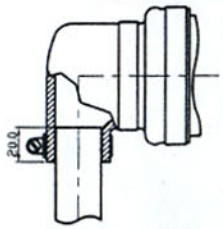

METHOD OF FIXING SEA WATER PIPE
TO NEOPRENE END COVER HOSE CLIP
TO BS3628 SIZE No.162 (NOT SUPPLIED)

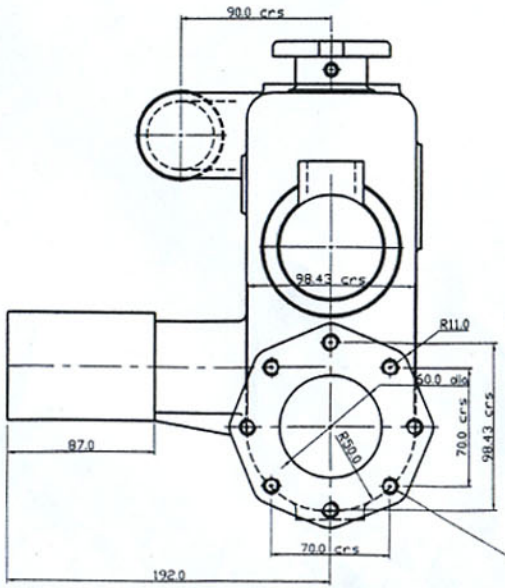

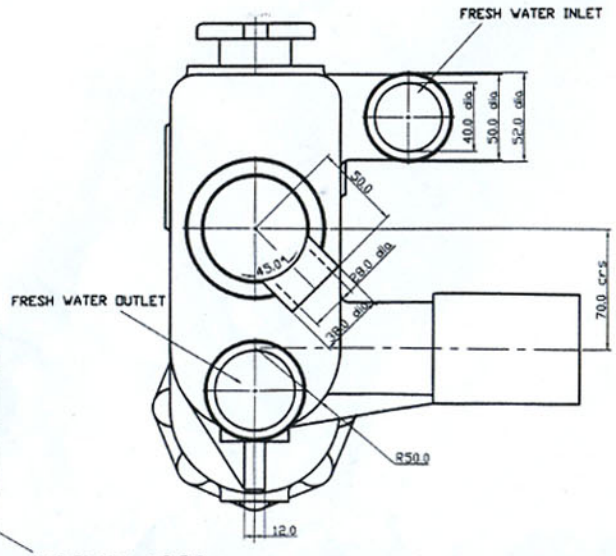

8-HOLES DRILL AND TAP
3/8" x 16 THD/"UNC x 16 DEEP DRILL 19 DEEP

MATERIALS

BODY~ALUMINIUM LM6M
TUBESTACK~CUPRO NICKEL 90/10
END COVERS~NEOPRENE

PART No.	DRG No.	No. OFF	DESCRIPTION	ITEM	MAT.
	3596	2	PUSH IN CORE PLUG	11	S.S.
	3469	1	FILLER INSERT	10	BRASS
	2755	1	FILLER NECK	9	BRASS
	3594	1	NAMEPLATE	8	BRASS
	2753	1	FILLER CAP	7	M.S.
¾" BSP	3597	2	CORE PLUG	6	M.S.
No.312		2	HOSE CLIPS	5	S.S.
No.237		2	HOSE CLIPS	4	S.S.
	3186	2	END COVERS	3	NEOPRENE
518-828 TN1		1	TUBESTACK	2	CN10
PE58	4239	1	MANIFOLD BODY	1	LM6M

ALL DIMENSIONS IN MILLIMETRES

E.J. BOWMAN (BIRMINGHAM) LIMITED
CHESTER STREET
BIRMINGHAM B6 4AP

DRAWN: G.S.BRADLEY
DATE: 20-8-87
REDRAWN: S.MADDEN
DATE: 11 MAR 1988
CHECKED:
SCALE: 1:1

TITLE: MANIFOLD ASSY TYPE PE1006

DRAWING NUMBER: 4240

ASAP 201237